ALL-CITY METAL

A: _____
B: _____
C: _____

MC4500-M COMPACTOR W/ TRANSITION

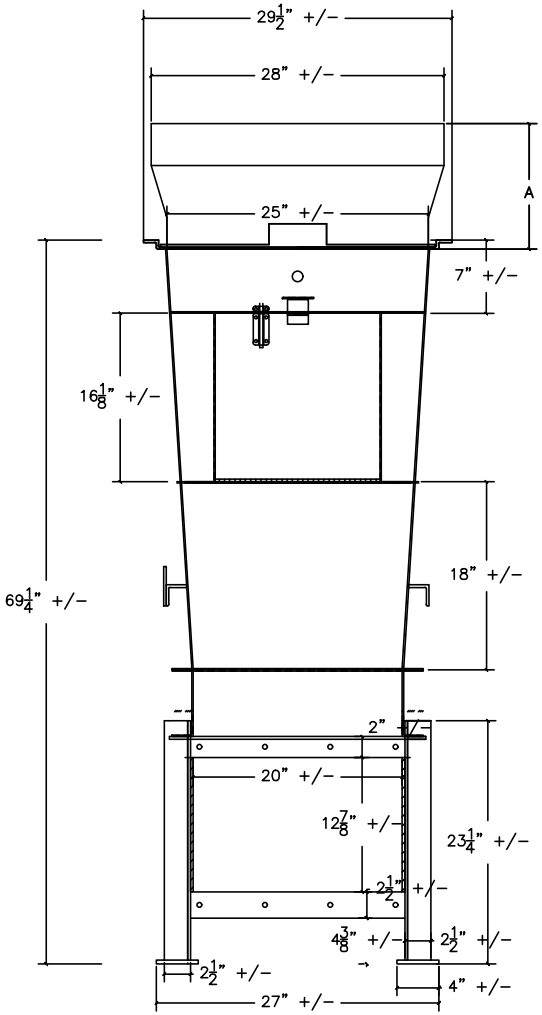

FRONT VIEW

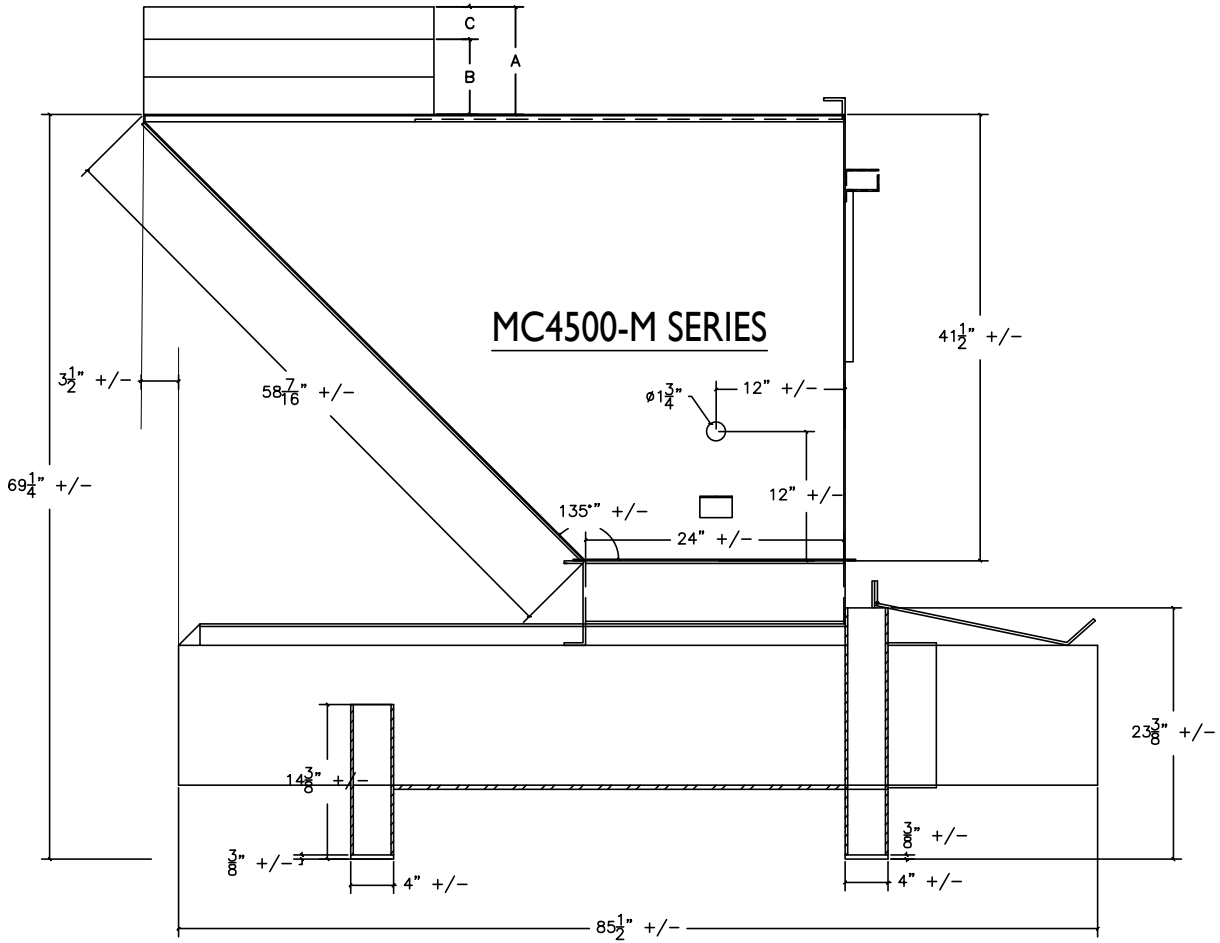

SIDE VIEW