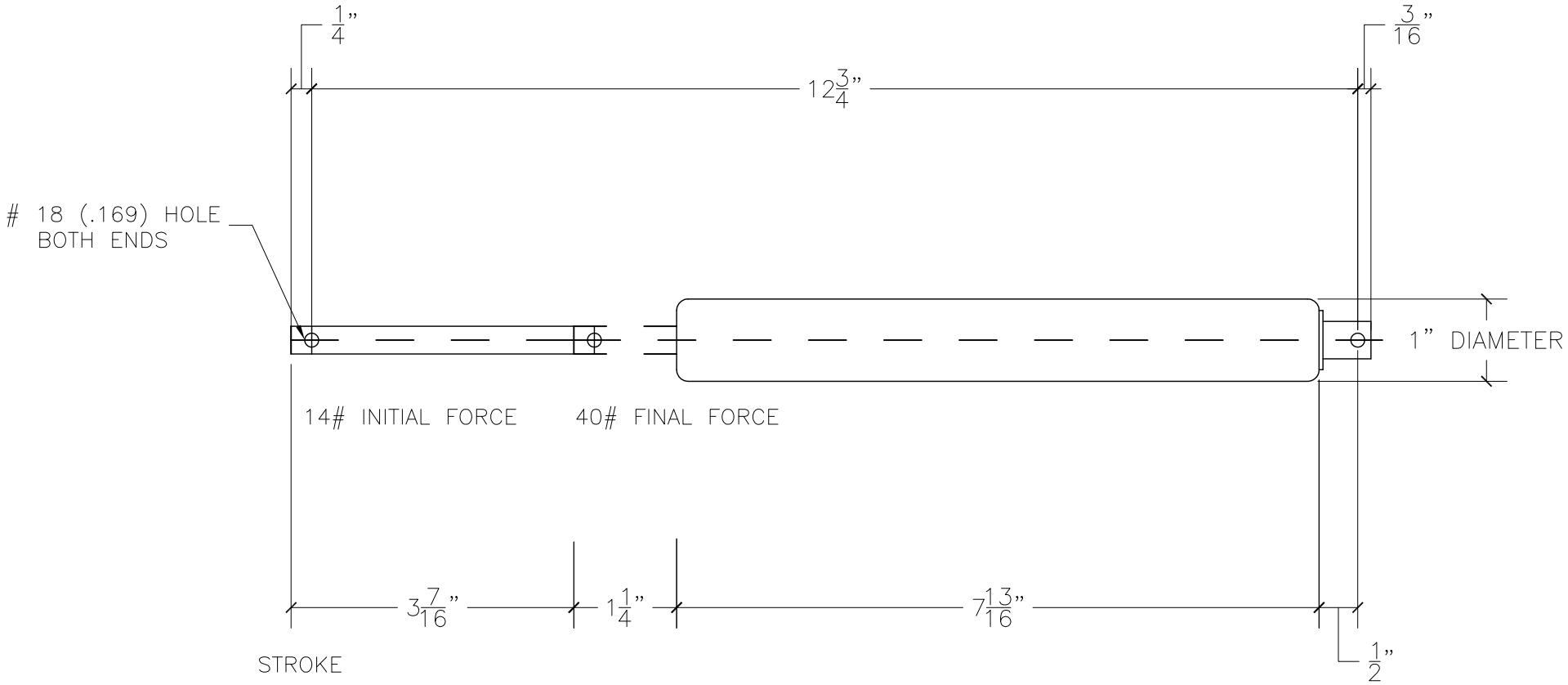

8" EXTENDED SHAFT CYLINDER

53-16 35th Street, Suite 3B
Long Island City, N.Y. 11101
phone: 718-472-5700
fax: 718-472-5813
website: www.allcitymetal.com
e-mail: info@allcitymetal.com

ALL-CITY METAL INC.™
SHEET METAL FABRICATORS

8" NORMALLY OPEN CLOSERS (OUTER)
MODEL # 8NOCL-1