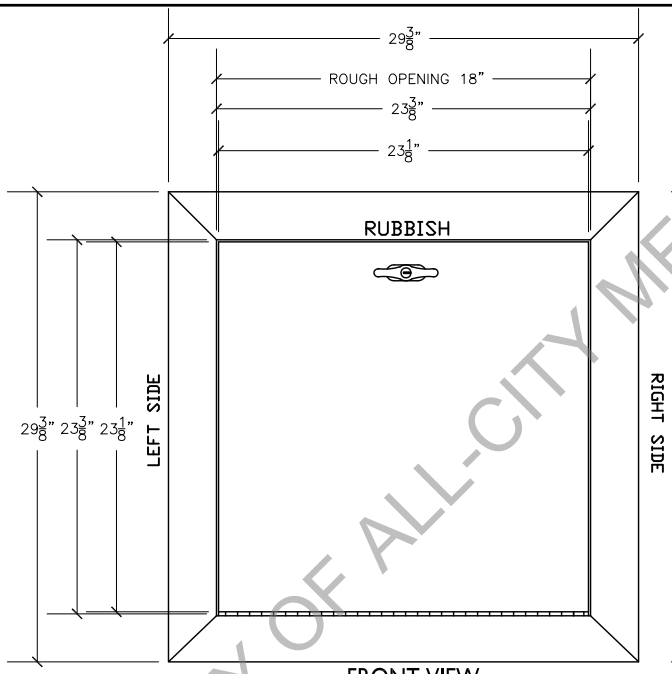

FRONT VIEW

24"X24" BOTTOM HINGED
A/D U.L. APPROVED
W/ RUBBER BAFFLE
(NTS)

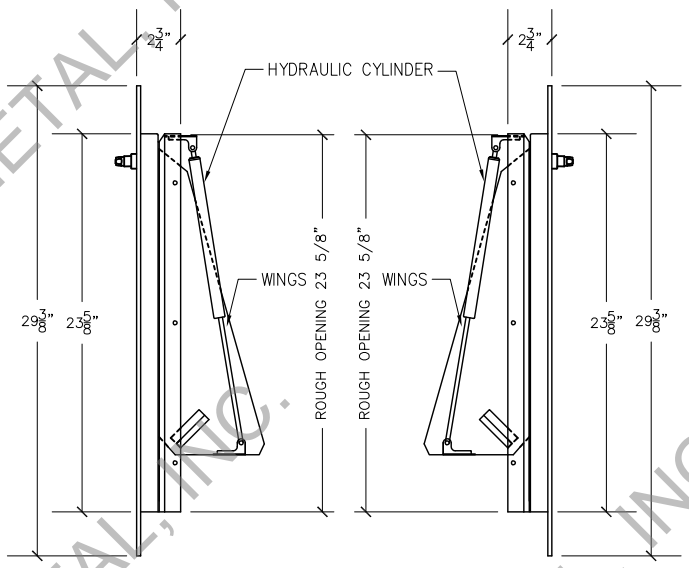

RIGHT VIEW

RUBBER BAFFLE NOT SHOWN

LEFT VIEW

RUBBER BAFFLE NOT SHOWN

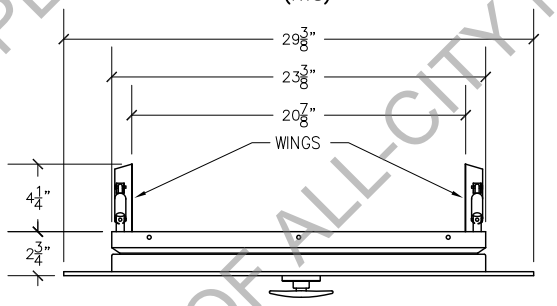

TOP VIEW

RUBBER BAFFLE NOT SHOWN

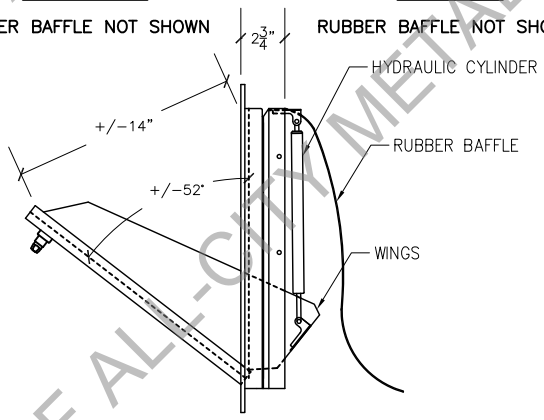

TRASH DOOR AT OPENED POSITION

WITH RUBBER BAFFLE

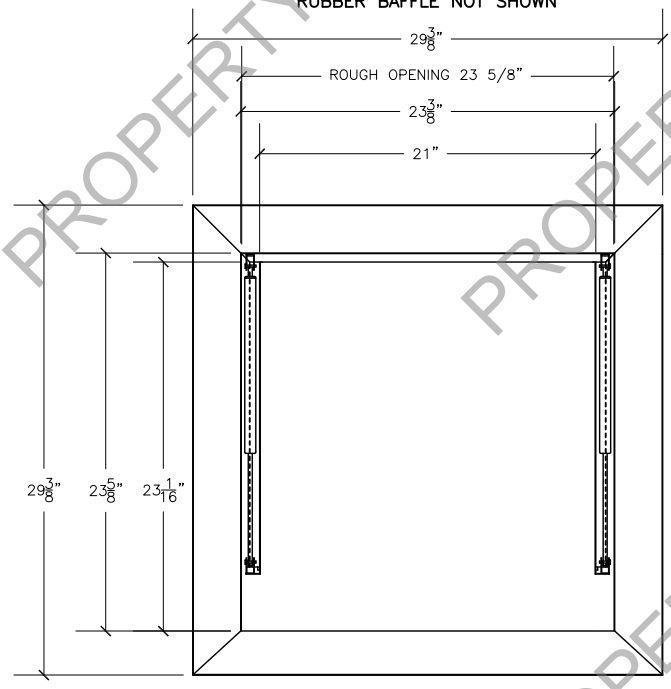

REAR VIEW

RUBBER BAFFLE NOT SHOWN

Trash chute door specifications:

Doors are fabricated with type 304 Stainless Steel, Stainless Steel hinges, with a self closing, self latching quite door closing function. Classified 'UL' Class B labeled: 1-1/2 hour fire rated with 30-minute temperature rise of 250 degrees Fahrenheit and a frame suitable for enclosing multiple type chase construction. Doors are provided with key locking devices at each intake door location. Door trim is embossed **"RUBBISH"**.

NOTE:
Rough opening required 23 7/8"x23 7/8"

53-16 35th Street, Suite 3B
Long Island City, N.Y. 11101
phone: 718-472-5700
fax: 718-472-5813
website: www.allcitymetal.com
e-mail: info@allcitymetal.com

ALL-CITY METAL INC.
SHEET METAL FABRICATORS

TRASH CHUTE INTAKE DOOR

MODEL # 45B3 24"X24" TD/BH 3" TRIM

PROPERTY OF ALL-CITY METAL, INC.