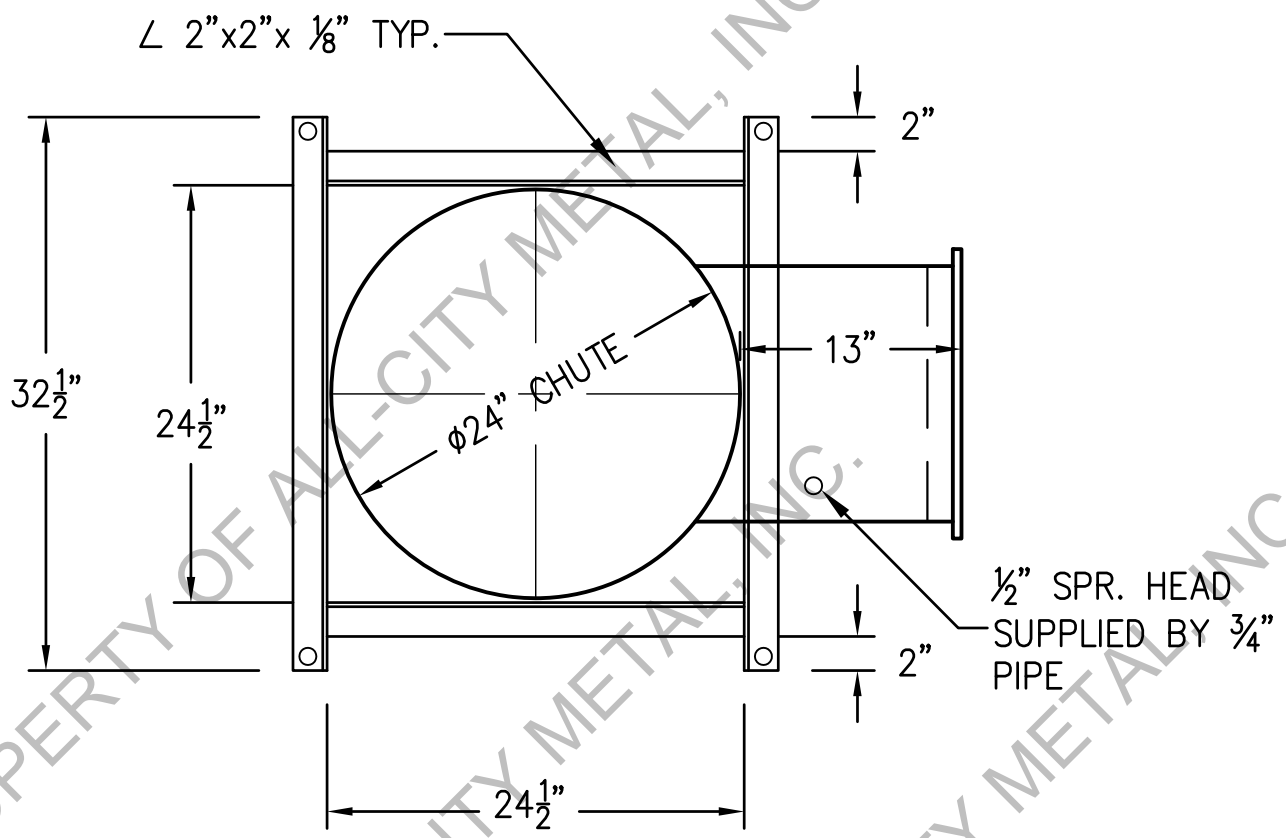

TYPICAL SUPPORT FRAME

N.T.S.

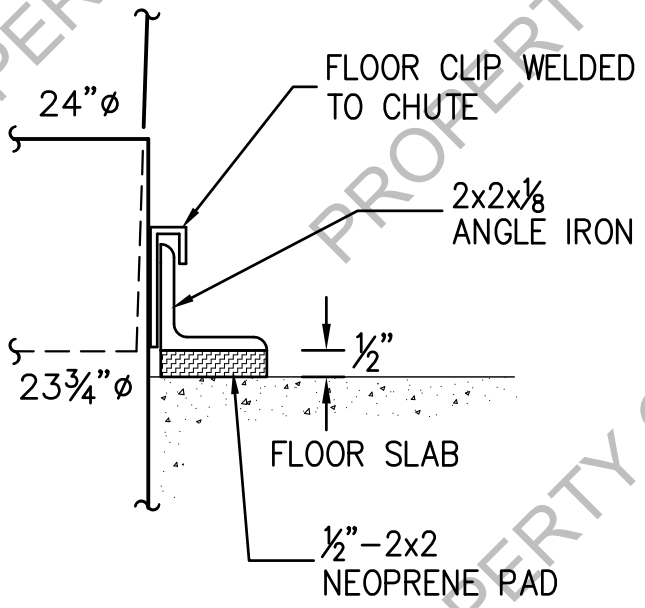

FLOOR CLIP DETAIL

N.T.S.

Floor Frame Specifications :

Standard Floor Frames are 2"x2"x1/8" steel Angle Iron and are fabricated 12" longer that the diameter of the Chute. Custom frames can be fabricated to accommodate any job condition or specific specification.

53-16 35th Street, Suite 3B
Long Island City, N.Y. 11101
phone: 718-472-5700
fax: 718-472-5813
website: www.allcitymetal.com
e-mail: info@allcitymetal.com

ALL-CITY METAL INC.™
SHEET METAL FABRICATORS

FLOOR FRAME DETAIL

PROPERTY OF ALL-CITY METAL, INC.